Lubrication Instruction for Awnings
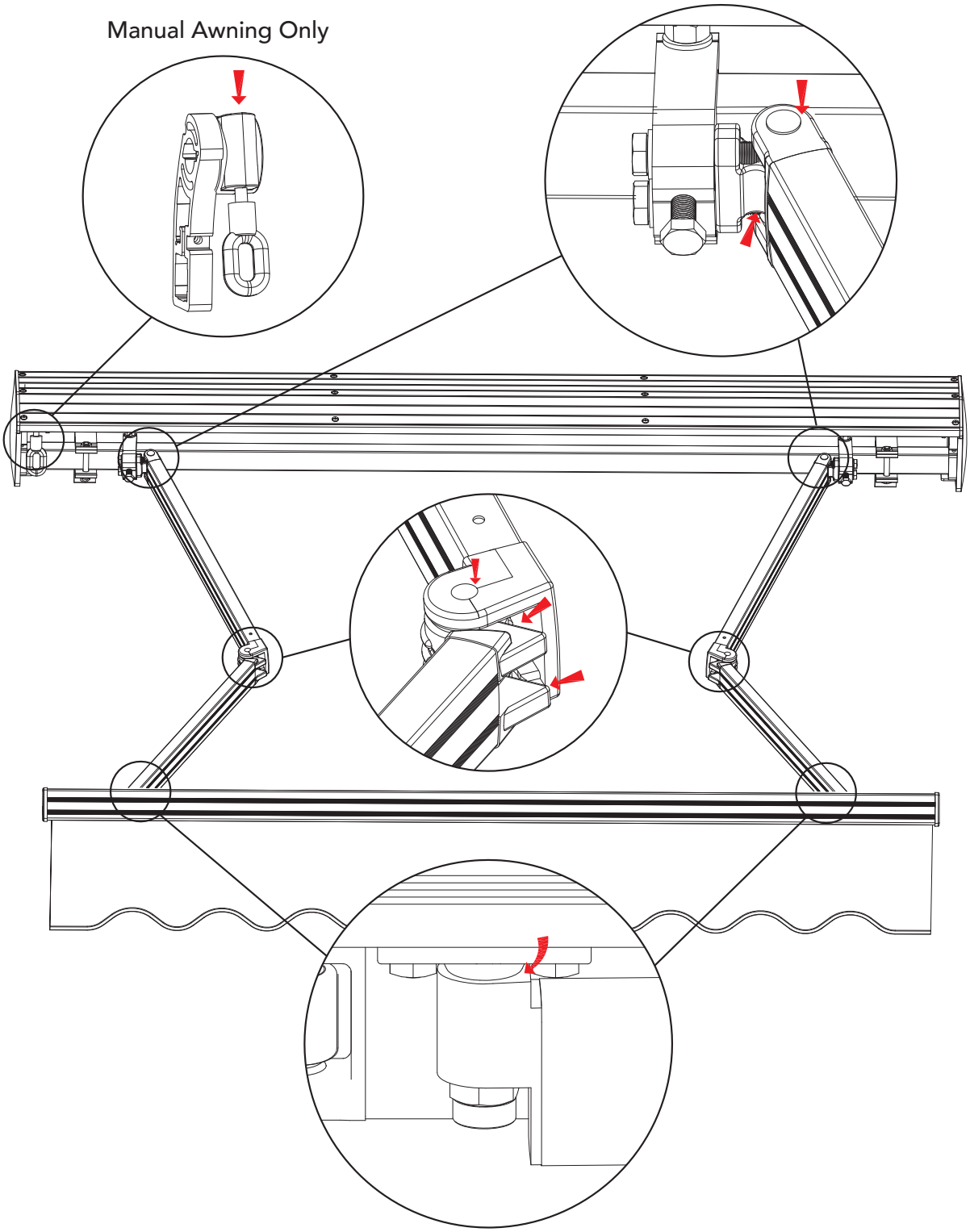
Use a dry silicone spray lubricant on the axle of the roller tube, the ends of the roller tube, and on the sides opposite to the motor gear. Be sure to avoid spraying lubricant onto the canvas.
Lubricant application is normally not needed more than once a year. If, however, the mechanism develops a squeak, it's just a sign that the lubricant is worn away and additional lubricant should be applied.